Steel Lintel is used to replace conventional castingof concerts lintels over door openings. Light weight lintels are manufactured using steel of galvanized coating type Z275 for anticorrosion. It complies with the requirements and conforms to BS EN 10142:1991./ASTM-A525/JIS.G3302.

U-Channel Lintel (1)

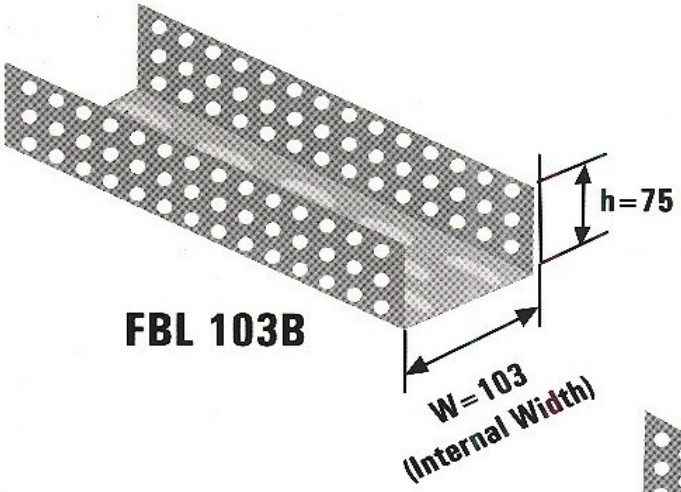

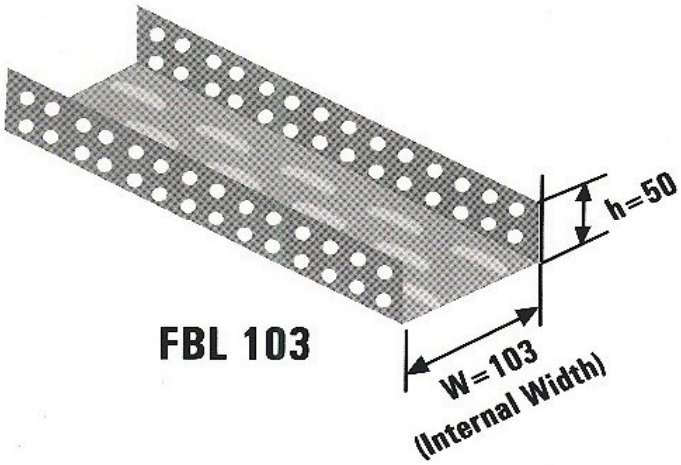

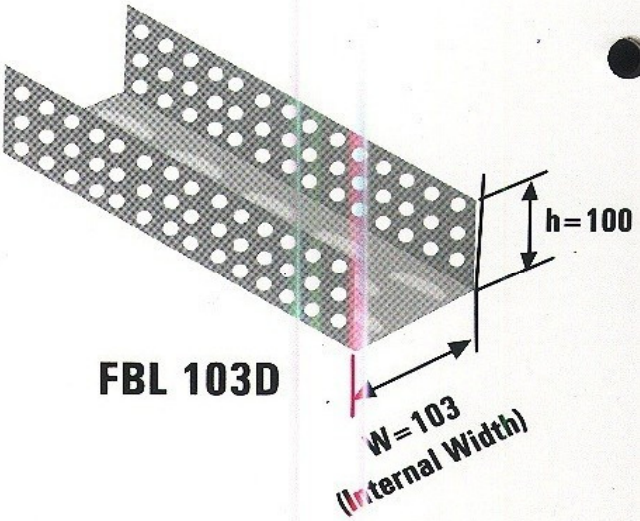

Lintel Ref. No.	FBL/103																			
Lengths (L)	900-1200				1300-1500				1600-1800				1900-2100				2200-2400			
Height (H)	50			75	50			75	50			75	50			75	50			75
Material Thickness	2	3	4	4	2	3	4	4	2	3	4	4	2	3	4	4	2	3	4	4
Safe Distributed Loading (tonnes)	0.55	0.93	1.24	1.70	0.42	0.60	0.68	1.28		0.40	0.50	1.04			0.36	0.92			0.27	0.70
Total Width (W)	103				103				103				103				103			
Lintel Brackets					A=100				B=150				C=150				D=5			
No.& Diameter of Anchors					3M8 x 80															

(All Dimensions in mm.)

U-Channel Lintel (2)

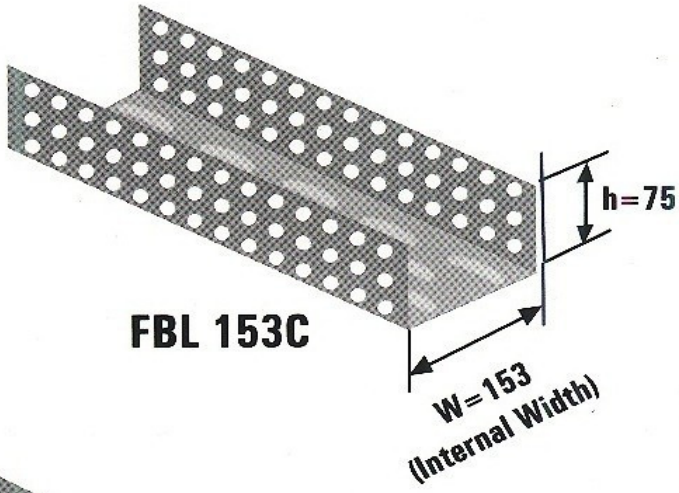

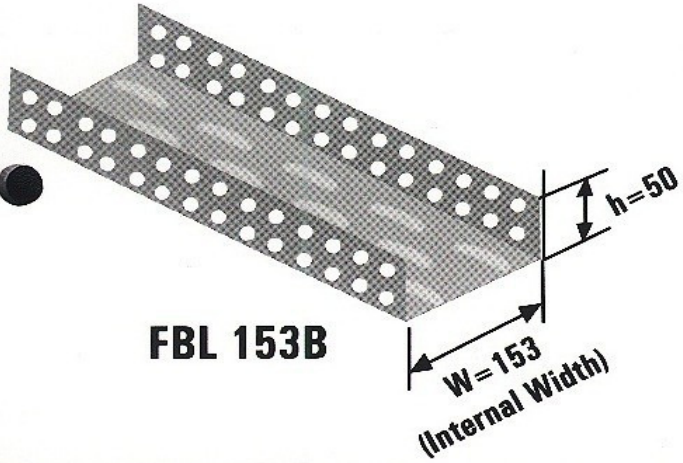

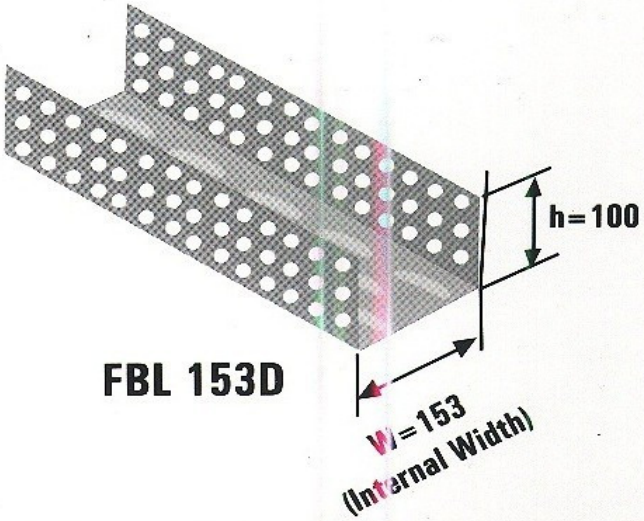

Lintel Ref. No.	FBL/153																			
Lengths (L)	900-1200				1300-1500				1600-1800				1900-2100				2200-2400			
Height (H)	50			75	50			75	50			75	50			75	50			75
Material Thickness	2	3	4	4	2	3	4	4	2	3	4	4	2	3	4	4	2	3	4	4
Safe Distributed Loading (tonnes)	0.48	0.88	1.32	1.70	0.37	0.60	0.71	1.28		0.44	0.58	1.04			0.40	0.92			0.31	0.70
Total Width (W)	153				153				153				153				153			
Lintel Brackets					A=150				B=150				C=150				D=5			
No.& Diameter of Anchors					4M8 x 80															

(All Dimensions in mm.)

U-Channel Lintel (3)

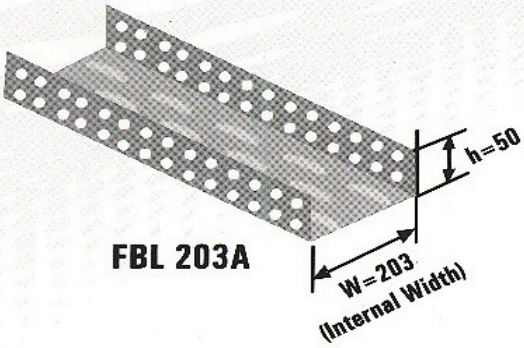

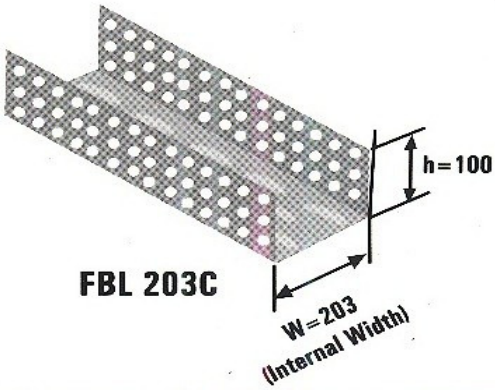

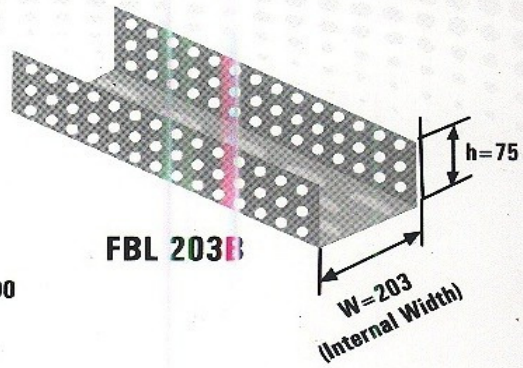

Lintel Ref. No.	FBL/203																			
Lengths (L)	900-1200				1300-1500				1600-1800				1900-2100				2200-2400			
Height (H)	50			75	50			75	50			75	50			75	50			75
Material Thickness	2	3	4	4	2	3	4	4	2	3	4	4	2	3	4	4	2	3	4	4
Safe Distributed Loading (tonnes)	0.62	0.89	1.27	1.70	0.48	0.60	0.72	1.28		0.44	0.59	1.04			0.41	0.92			0.32	0.70
Total Width (W)	203				203				203				203				203			
Lintel Brackets					A=200				B=150				C=200				D=6			
No.& Diameter of Anchors					3M10 x 80															

(All Dimensions in mm.)

U-Channel Lintel (4)

Lintel Ref. No.	FBL/253																			
Lengths (L)	900-1200				1300-1500				1600-1800				1900-2100				2200-2400			
Height (H)	50			75	50			75	50			75	50			75	50			75
Material Thickness	2	3	4	4	2	3	4	4	2	3	4	4	2	3	4	4	2	3	4	4
Safe Distributed Loading (tonnes)	0.62	0.89	1.27	1.70	0.48	0.61	0.72	1.28		0.44	0.59	1.04			0.41	0.92			0.32	0.70
Total Width (W)	253				253				253				253				253			
Lintel Brackets					A=250				B=150				C=200				D=6			
No.& Diameter of Anchors					4M10 x 80															

(All Dimensions in mm.)